DAB
WATER•TECHNOLOGY

EVOSTA 2
EVOSTA 3

ELECTRONIC CIRCULATORS
FOR HEATING AND COOLING SYSTEMS

EVOSTA 2

WET ROTOR ELECTRONIC CIRCULATORS

in line with European Directive
ErP 2009/125/EC (formerly EuP) of 2015

TECHNICAL DATA

Operating range: 0,4-3,6 m^3/h with head up to 6,9 metres.
Pumped liquid temperature range: from -10 °C to +110°C
Working pressure: 10 bar (1000 kPa)
Protection class: IPX5
Insulation class: F
Installation: with horizontal motor axis
Standard power input:: single-phase 1x230 V~ 50/60 Hz
Pumped liquid Clean, free of solids and mineral oils, non-viscous, chemically neutral, with properties similar to water (glycol max 30%).

APPLICATIONS

Low energy consumption electronic pump for water circulation in all types of domestic heating and cooling systems.

ADVANTAGES

The new range of **EVOSTA 2** circulators by DAB combines the strength of an mechanical circulator with the benefits of the electronic circulator.
Thanks to the permanent magnet synchronous motor, the frequency converter and the energy efficiency of EEI $\leq$ 0.18, as well as the protection class IPX5 and the integrated bleeding plug, the **EVOSTA 2** family ranks as one of the best products in the category in terms of performance and reliability. The range of **EVOSTA 2** circulators is the perfect replacement for old three-speed circulators due to its compact size and all-round performance. The product is also extremely user-friendly, with a single button for sequential setting and direct access to the motor shaft for unlocking it when necessary.

CONSTRUCTION FEATURES

Cast iron pump body with cataphoresis paint coating and wet rotor motor. Steel motor casing, technopolymer impeller. Ceramic motor shaft on ceramic bushings lubricated by the pumped liquid. Stainless steel rotor liner, stator liner and closing flange. Graphite thrust ring.
EPDM seal ring and brass bleeding plug.
Thanks to the internal protection of the motor, the pump does not require any overload protection.

CONTROL PANEL

The settings of the **EVOSTA 2, EVOSTA 3** circulators can be modified in the control panel on the facia of the pump device. The pumps have nine settings that can be selected scrolling the **MODE** button. Three LED lights on the facia show the current setting.

EVOSTA 3 circulator has a display showing the following data:
- Head of the selected curve
- Instantaneous power consumption in Watts.
- Instantaneous head in m
- Instantaneous flow rate in m^3/h

DAB PUMPS reserves the right to make modifications without notice

MATERIALS

N.	PARTS	MATERIALS
1	ROTOR CAN FLANGE	AISI 316
2	IMPELLER	ULTRASON
3	SHAFT	ALUMINA
4	ROTOR	Fe
5	BEARING HOUSING	BRASS
6	BEARING	ALUMINA
7	AXIAL BEARING	GRAPHITE
8	AXIAL HOUSING	EPDM
9	PLUG	BRASS
10	O-ring	EPDM
11	STATOR HOUSING	AISI 304
12	ENCLOUSER SHELL	POLYCARBONATE
13	ENCLOUSER	POLYCARBONATE
14	ROTOR SLEEV	AISI 304
15	SEAL	EPDM
16	PUMP HOUSING	CAST IRON - BRONZE (SAN VERSION)
17	NECK RING	AISI 304
18	CONNECTOR	POLYCARBONATE

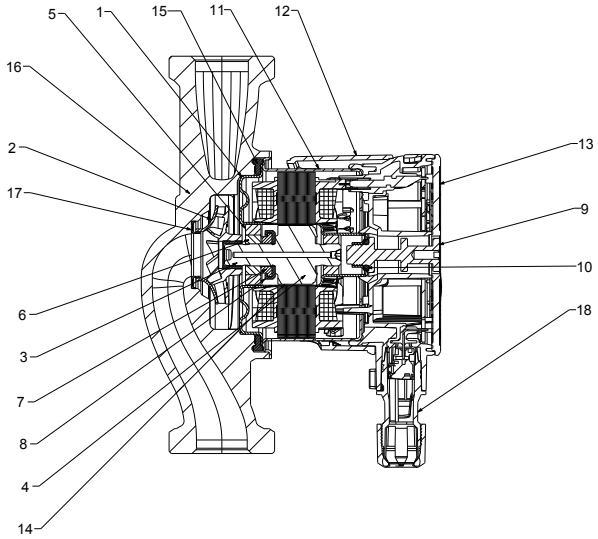

REGULATION MODE

PROPORTIONAL PRESSURE REGULATION MODE

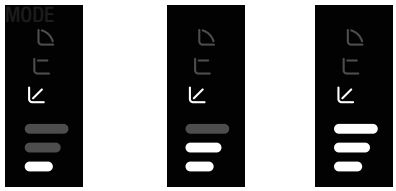

PP1 PP2 PP3

CONSTANT PRESSURE REGULATION MODE

CP1 CP2 CP3

CONSTANT PRESSURE REGULATION

I II III

Model Number (example)

EVOSTA 40/70 130 X

Threaded connections electronic circulator

Maximum head range (dm)

Centre distance (mm)

Standard (no ref.) = 1" ½ threaded connections

½" = 1" threaded connections

X = 2" threaded connections

EVOSTA 2 - ELECTRONIC CIRCULATORS FOR DOMESTIC HEATING AND COOLING SYSTEMS - SINGLE, WITH UNIONS

Pumped liquid temperature range: from -10 °C to +110 °C - **Maximum operating pressure:** 10 bar (1000 kPa)

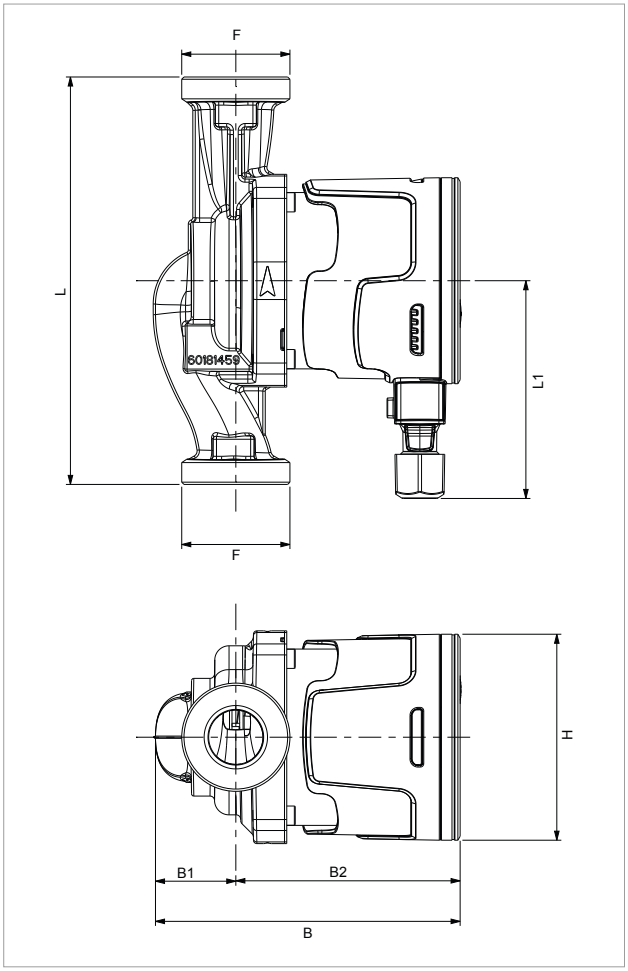

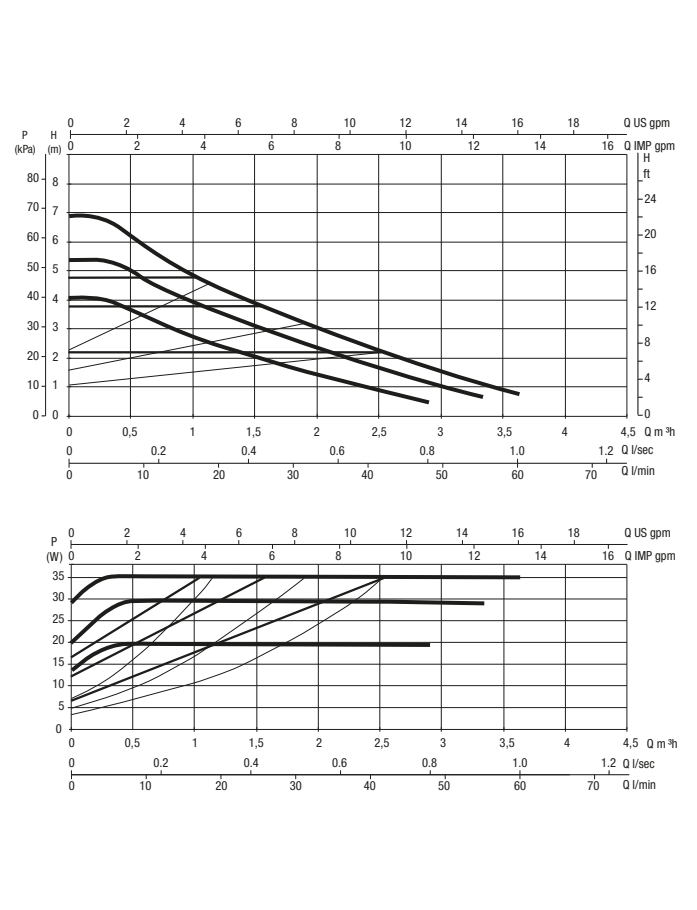

The performance curves are based on kinematic viscosity values = 1 mm²/s and density equal to 1000 kg/m³. Curve tolerance according to ISO 9906.

MODEL	Q=m³h	0,0	0,3	0,6	0,9	1,8	2,4	3,0	3,6
	Q=l/min	0	5	10	15	30	40	50	60
EVOSTA 2 40-70/130 1”	H (m)	6,9	6,9	5,8	5,1	3,4	2,4	1,6	0,8
EVOSTA 2 40-70/130 1/2”		6,9	6,9	5,8	5,1	3,4	2,4	1,6	0,8
EVOSTA 2 40-70/180 1”		6,9	6,9	5,8	5,1	3,4	2,4	1,6	0,8
EVOSTA 2 40-70/180X 1”1/4		6,9	6,9	5,8	5,1	3,4	2,4	1,6	0,8

MODEL	CENTRE DISTANCE mm	PUMP CONNECTIONS	POWER INPUT 50 Hz	P1 MAX W	In A	EEI *	MINIMUM SUCTION PRESSURE	
							t°	90 °
EVOSTA 2 40-70/130 1”	130	DN25 THREADED (G 1” ½)	1x230 V ~	35	0,043 - 0,32	≤ 0,18	m.c.a.	10
EVOSTA 2 40-70/130 1/2”	130	DN15 THREADED (G 1”)	1x230 V ~	35	0,043 - 0,32	≤ 0,18	m.c.a.	10
EVOSTA 2 40-70/180 1”	180	DN25 THREADED (G 1” ½)	1x230 V ~	35	0,043 - 0,32	≤ 0,18	m.c.a.	10
EVOSTA 2 40-70/180X 1”1/4	180	DN32 THREADED (G 2”)	1x230 V ~	35	0,043 - 0,32	≤ 0,18	m.c.a.	10

The parameter of reference for the more efficient circulators is EEI ≤ 0,18

MODEL	L	L1	B	B1	B2	H	F	PACKING DIMENSIONS			VOLUME m³	WEIGHT kg
								L	B	H		
EVOSTA 2 40-70/130 1”	130	96	134.6	35.5	99.1	91	1” ½	142	99	150	0,0021	2,02
EVOSTA 2 40-70/130 1/2”	130	96	134.6	35.5	99.1	91	1	142	99	150	0,0021	1,86
EVOSTA 2 40-70/180 1”	180	96	134.6	35.5	99.1	91	1” ½	192	99	150	0,0028	2,19
EVOSTA 2 40-70/180X 1”1/4	180	96	134.6	35.5	99.1	91	2”	192	99	150	0,0028	2,35

DAB PUMPS reserves the right to make modifications without notice

EVOSTA 2 SAN

WET ROTOR ELECTRONIC CIRCULATORS

TECHNICAL DATA

Operating range: 0,4-4,2 m^3/h with head up to 8 metres.
Pumped liquid temperature range: from -10 °C to +110°C
Working pressure: 10 bar (1000 kPa)
Protection class: IPX5
Insulation class: F
Installation: with horizontal motor axis.
Standard power input:: single-phase 1x230 V~ 50/60 Hz
Pumped liquid Clean, free of solids and mineral oils, non-viscous, chemically neutral, with properties similar to water (glycol max 30%).

APPLICATIONS

Low energy consumption electronic pump for domestic hot water circulation.

ADVANTAGES

The new range of **EVOSTA 2 SAN** circulators by DAB combines the strength of a mechanical circulator with the benefits of an electronic circulator.
Thanks to the permanent magnet synchronous motor, the frequency converter, as well as the protection class IPX5 and the integrated bleeding plug. **EVOSTA 2 SAN** family ranks as one of the best products in the category in terms of performance and reliability. The range of **EVOSTA 2 SAN** circulators is the perfect replacement for old three-speed circulators due to its compact size and all-round performance. The product is also extremely user-friendly, with a single button for sequential setting and direct access to the motor shaft for unlocking it when necessary.

CONSTRUCTION FEATURES

Bronze pump body and wet rotor motor. Steel motor casing, technopolymer impeller. Ceramic motor shaft on ceramic bushings lubricated by the pumped liquid.
Stainless steel rotor liner and closing flange. Graphite thrust ring. EPDM seal ring and brass air bleeding plug.
Thanks to the internal protection of the motor, the pump does not require any overload protection.

CONTROL PANEL

The settings of **EVOSTA 2 SAN** circulators can be modified in the control panel on the facia of the pump. The pump has nine settings that can be selected scrolling the **MODE** button. Six illuminated segments on the display indicate the settings of the pump.

DAB PUMPS reserves the right to make modifications without notice

MATERIALS

N°	PARTS	MATERIALS
1	ROTOR CAN FLANGE	AISI 316
2	IMPELLER	ULTRASON
3	SHAFT	ALUMINA
4	ROTOR	Fe
5	BEARING HOUSING	BRASS
6	BEARING	ALUMINA
7	AXIAL BEARING	GRAPHITE
8	AXIAL HOUSING	EPDM
9	PLUG	BRASS
10	O-ring	EPDM
11	STATOR HOUSING	AISI 304
12	ENCLOUSER SHELL	POLYCARBONATE
13	ENCLOUSER	POLYCARBONATE
14	ROTOR SLEEV	AISI 304
15	SEAL	EPDM
16	PUMP HOUSING	CAST IRON - BRONZE (SAN VERSION)
17	NECK RING	AISI 304
18	CONNECTOR	POLYCARBONATE

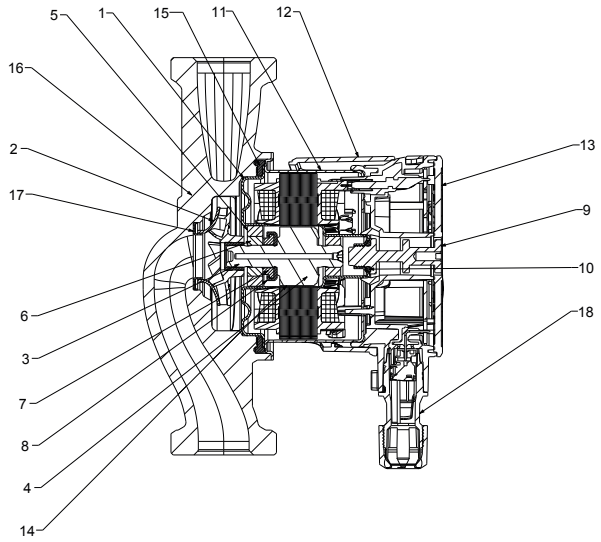

REGULATION MODES

PROPORTIONAL PRESSURE REGULATION MODE

PP1 PP2 PP3

CONSTANT PRESSURE REGULATION MODE

CP1 CP2 CP3

FIXED CURVE REGULATION MODE

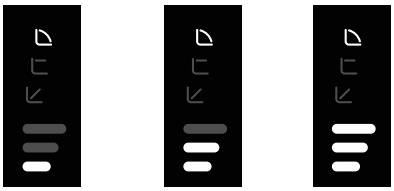

I II III

Model Number:
(example)

	EVOSTA 2 SAN	40/70	150
Threaded connection electronic circulator			
Maximum head range (dm)			
Centre distance (mm)			

EVOSTA 2 SAN - ELECTRONIC CIRCULATORS FOR DOMESTIC HEATING SYSTEMS - SINGLE, WITH UNIONS

Pumped liquid temperature range: from -10 °C to +110 °C - **Maximum operating pressure:** 10 bar (1000 kPa)

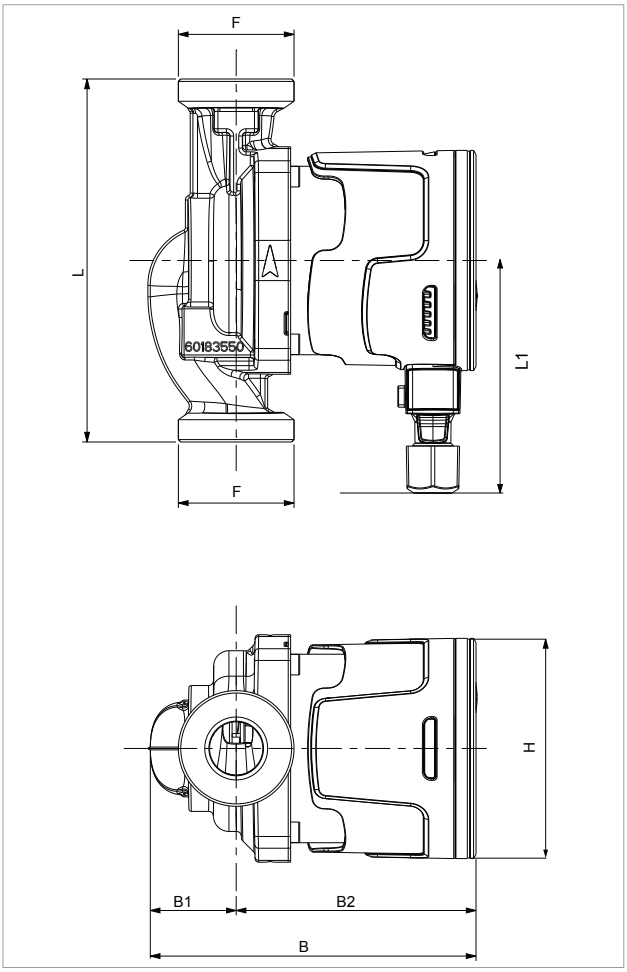

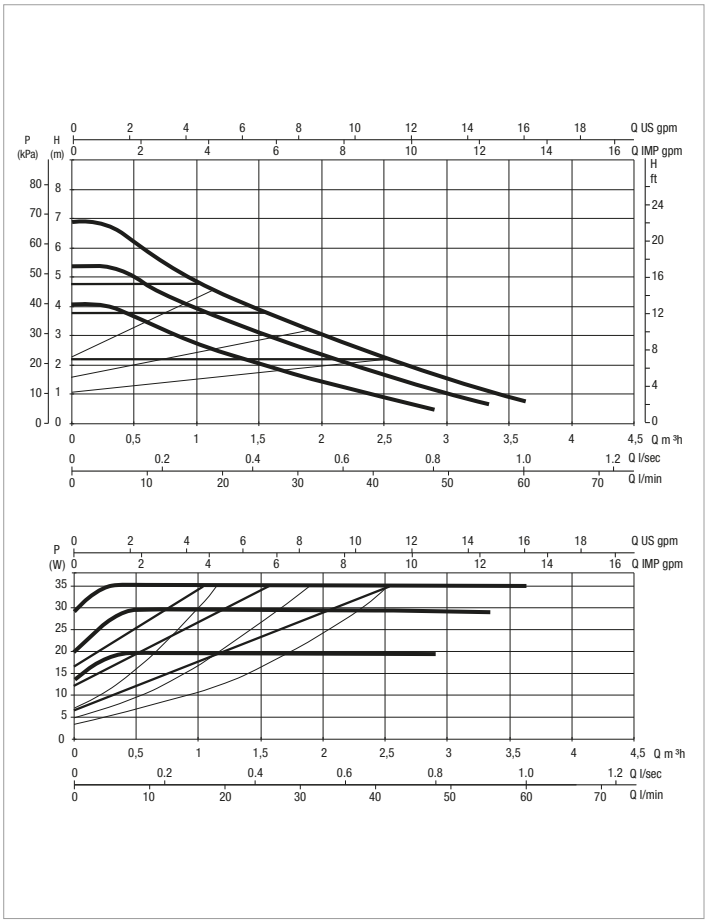

The performance curves are based on kinematic viscosity values = 1 mm²/s and density equal to 1000 kg/m³. Curve tolerance according to ISO 9906.

MODEL	Q=m³h	0,0	0,3	0,6	0,9	1,8	2,4	3,0	3,6
	Q=l/min	0	5	10	15	30	40	50	60
EVOSTA 2 SAN 40 -70/150	H (m)	6,9	6,9	5,8	5,1	3,4	2,4	1,6	0,8

MODEL	CENTRE DISTANCE mm	PUMP CONNECTIONS	POWER INPUT 50 Hz	P1 MAX W	In A	MINIMUM SUCTION PRESSURE	
						t°	90 °
EVOSTA 2 SAN 40 -70/150	150	DN25 THREADED (G 1" ½)	1x230 V ~	35	0,043 - 0,32	m.c.a.	10

MODEL	L	L1	B	B1	B2	H	F	PACKING DIMENSIONS			VOLUME m³	WEIGHT kg
								L	B	H		
EVOSTA 2 SAN 40 -70/150	150	96	134.6	35.5	99.1	91	1" ½	192	99	150	0,0028	2,16

DAB PUMPS reserves the right to make modifications without notice

EVOSTA 2 SAN - ELECTRONIC CIRCULATORS FOR DOMESTIC HEATING SYSTEMS - SINGLE, WITH UNIONS

Pumped liquid temperature range: from -10 °C to +110 °C - **Maximum operating pressure:** 10 bar (1000 kPa)

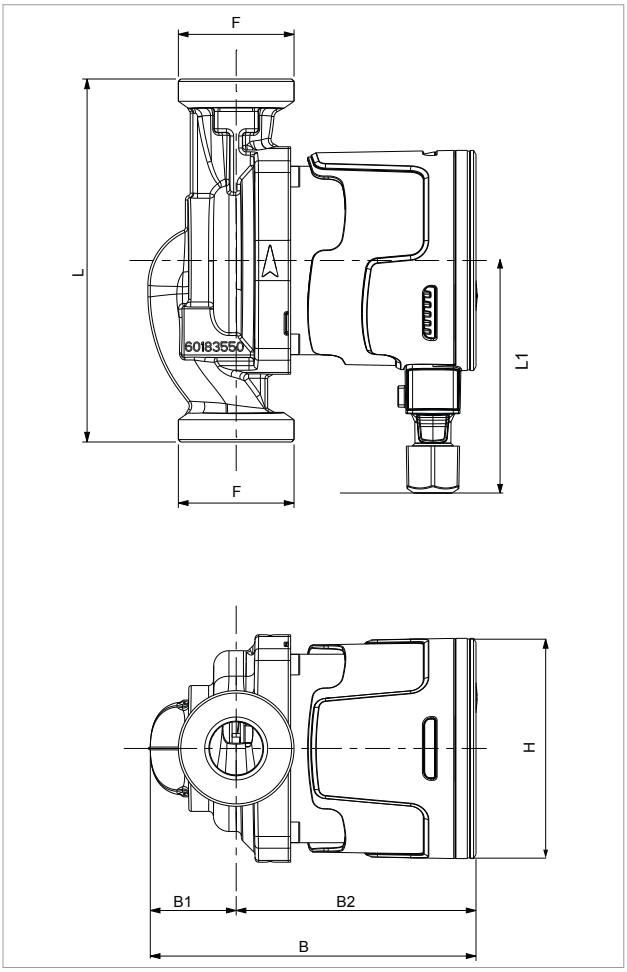

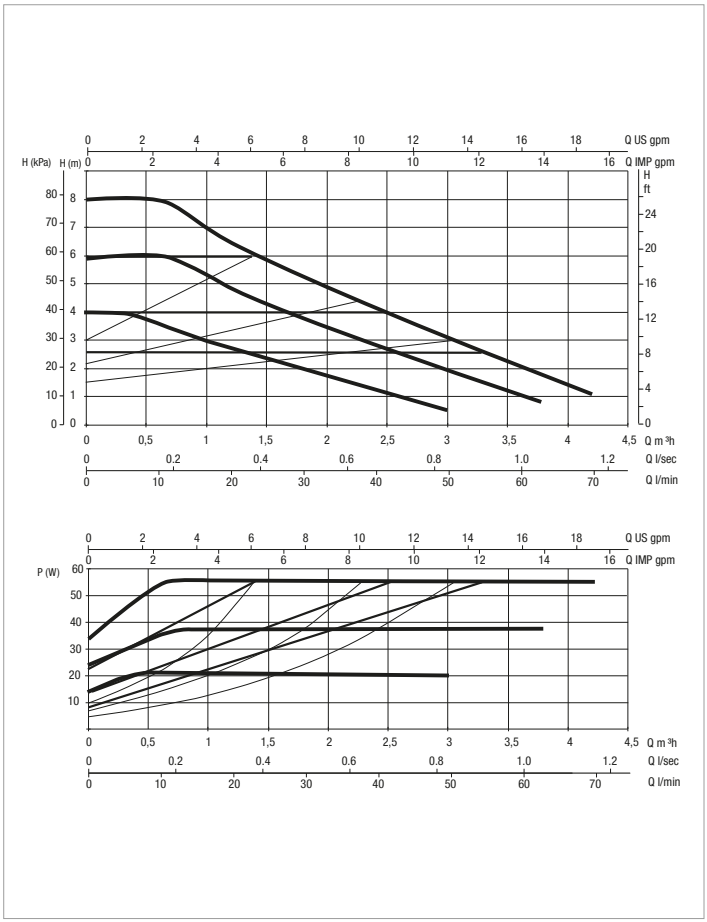

The performance curves are based on kinematic viscosity values = 1 mm²/s and density equal to 1000 kg/m³. Curve tolerance according to ISO 9906.

MODEL	Q=m³h	0,0	0,9	1,8	2,4	3,0	3,6	4,2
	Q=l/min	0	15	30	40	50	60	70
EVOSTA 2 SAN 80/150 1”		8	7,2	5,4	4,2	3,2	2,1	1

MODEL	CENTRE DISTANCE mm	PUMP CONNECTIONS	POWER INPUT 50 Hz	P1 MAX W	In A	MINIMUM SUCTION PRESSURE	
						t°	90 °
EVOSTA 2 SAN 80/150 1”	150	DN25 THREADED (G 1” ½)	1x230 V ~	55	0,053 -0,47	m.c.a.	10

MODEL	L	L1	B	B1	B2	H	F	PACKING DIMENSIONS			VOLUME m³	WEIGHT kg
								L	B	H		
EVOSTA 2 SAN 80/150 1”	150	96	134.6	35.5	99.1	91	1” ½	192	99	150	0,0028	2,16

DAB PUMPS reserves the right to make modifications without notice

EVOSTA 3

WET ROTOR ELECTRONIC CIRCULATORS

in line with European Directive
ErP 2009/125/EC (formerly EuP) of 2015

TECHNICAL DATA

Operating range: 0,4-4,2 m^3/h with head up to 8+ metres.
Pumped liquid temperature range: from -10 °C to +110°C
Working pressure: 10 bar (1000 kPa)
Protection class: IPX5
Insulation class: F
Installation: with horizontal motor axis.
Standard power input: single-phase 1x230 V~ 50/60 Hz
Pumped liquid Clean, free of solids and mineral oils, non-viscous, chemically neutral, with properties similar to water (glycol max 30%).

APPLICATIONS

Low energy consumption electronic pump for water circulation in all types of domestic heating and cooling systems.

ADVANTAGES

The new range of **EVOSTA 3** circulators by DAB combines the strength of an mechanical circulator with the benefits of the electronic circulator.
Thanks to the permanent magnet synchronous motor, the frequency converter and the energy efficiency of EEI $\leq$ 0.19, as well as the protection class IPX5 and the integrated bleeding plug, the **EVOSTA 3** family ranks as one of the best products in the category in terms of performance and reliability. The range of **EVOSTA 3** circulators is the perfect replacement for old three-speed circulators due to its compact size and all-round performance. The product is also extremely user-friendly, with a single button for sequential setting and direct access to the motor shaft for unlocking it when necessary.
EVOSTA 3 version has a display t showing the instantaneous flow rate, the instantaneous head and the instantaneous power consumption in Watts.
EVOSTA 3 version also offers the new function of automatic degassing.

CONSTRUCTION FEATURES

Cast iron pump body with cataphoresis paint coating and wet rotor motor. Steel motor casing, technopolymer impeller. Ceramic motor shaft on ceramic bushings lubricated by the pumped liquid. Stainless steel rotor liner, stator liner and closing flange. Graphite thrust ring.
EPDM seal ring and brass bleeding plug.
Thanks to the internal protection of the motor, the pump does not require any overload protection.

CONTROL PANEL

The settings of the **EVOSTA 2, EVOSTA 3** circulators can be modified in the control panel on the facia of the pump device. The pumps have nine settings that can be selected scrolling the **MODE** button. Three LED lights on the facia show the current setting.

EVOSTA 3 circulator has a display showing the following data:
- Head of the selected curve
- Instantaneous power consumption in Watts.
- Instantaneous head in m
- Instantaneous flow rate in m^3/h

DAB PUMPS reserves the right to make modifications without notice

MATERIALS

N°	PARTS	MATERIALS
1	ROTOR CAN FLANGE	AISI 316
2	IMPELLER	ULTRASON
3	SHAFT	ALUMINA
4	ROTOR	Fe
5	BEARING HOUSING	BRASS
6	BEARING	ALUMINA
7	AXIAL BEARING	GRAPHITE
8	AXIAL HOUSING	EPDM
9	PLUG	BRASS
10	O-ring	EPDM
11	STATOR HOUSING	AISI 304
12	ENCLOUSER SHELL	POLYCARBONATE
13	ENCLOUSER	POLYCARBONATE
14	ROTOR SLEEV	AISI 304
15	SEAL	EPDM
16	PUMP HOUSING	CAST IRON
17	NECK RING	AISI 304
18	CONNECTOR	POLYCARBONATE
19	INSULATION SHELL	PPE

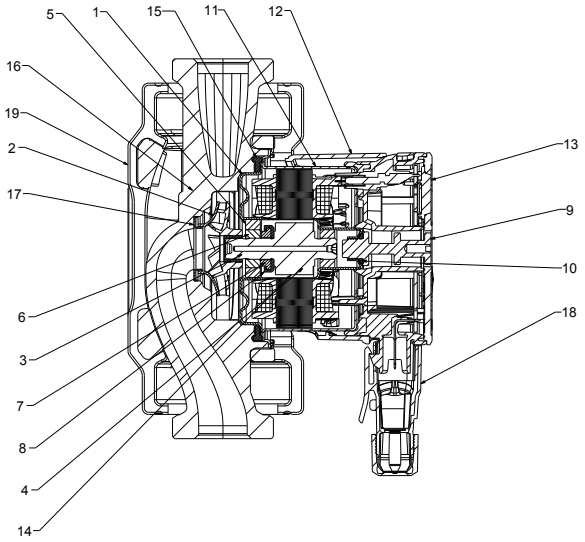

REGULATION MODES

PROPORTIONAL PRESSURE REGULATION MODE

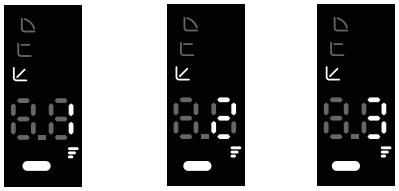

PP1 PP2 PP3

CONSTANT PRESSURE REGULATION MODE

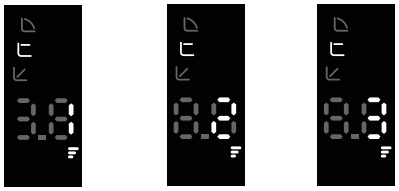

CP1 CP2 CP3

FIXED CURVE REGULATION MODE

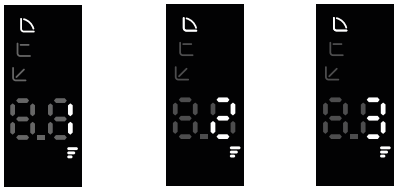

I II III

Model Number (example)

EVOSTA 40/70 130 X

Threaded connections electronic circulator

Maximum head range (dm)

Centre distance (mm)

Standard (no ref.) = 1" ½ threaded connections

½" = 1" threaded connections

X = 2" threaded connections

EVOSTA 3 - ELECTRONIC CIRCULATORS FOR DOMESTIC HEATING AND COOLING SYSTEMS - SINGLE, WITH UNIONS

Pumped liquid temperature range: from -10 °C to +110 °C - **Maximum operating pressure:** 10 bar (1000 kPa)

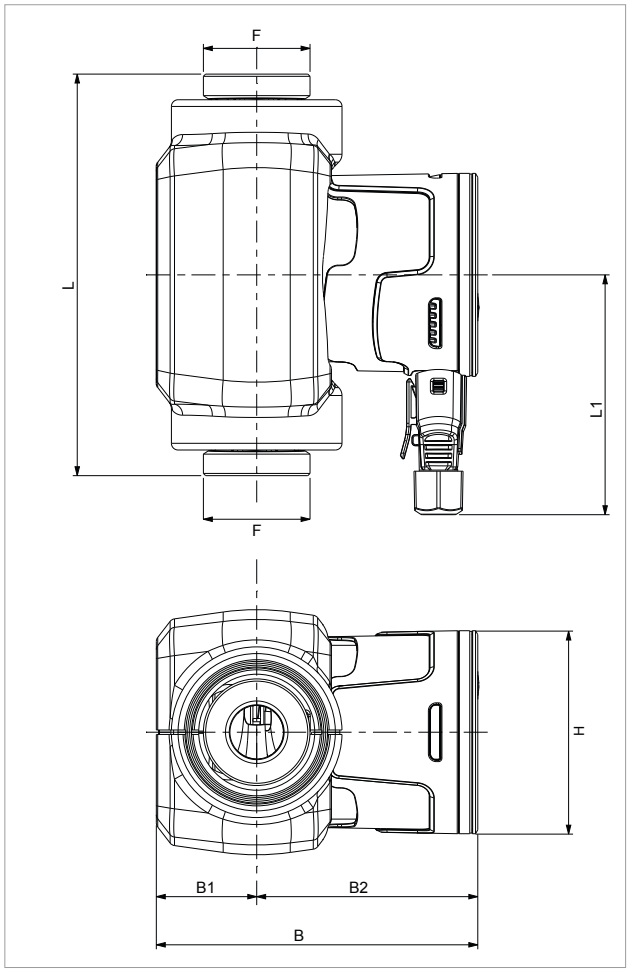

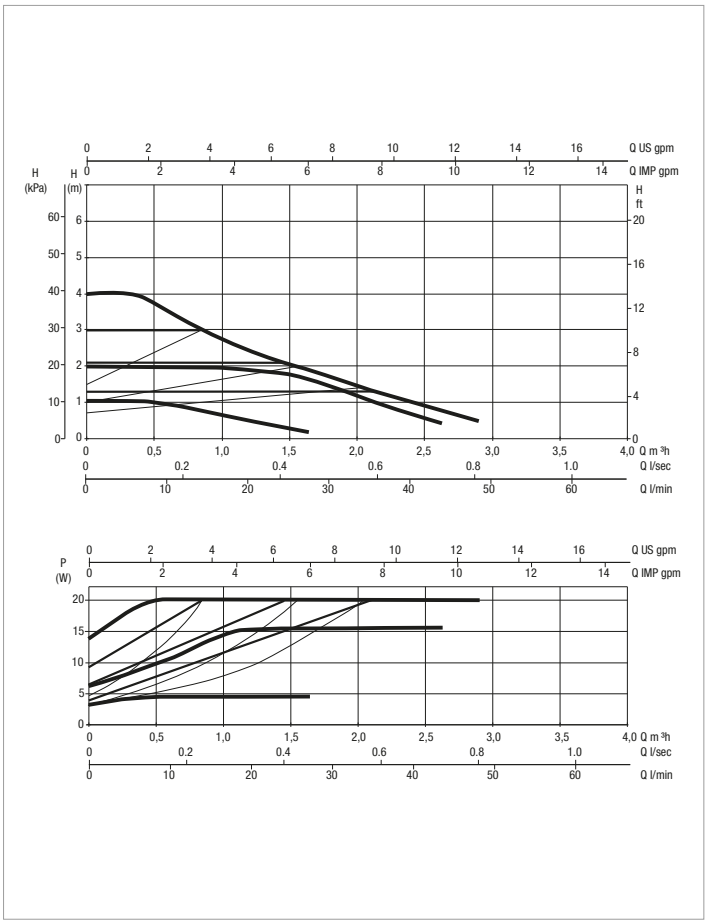

The performance curves are based on kinematic viscosity values = 1 mm²/s and density equal to 1000 kg/m³. Curve tolerance according to ISO 9906.

MODEL	Q=m³h	0	0,4	0,6	0,9	1,2	1,8	2,1	2,9
	Q=l/min	0	6	10	15	20	30	35	48
EVOSTA 3 40/130 1"	H (m)	4,0	4,0	3,5	2,9	2,5	1,7	1,3	0,5
EVOSTA 3 40/130 1/2"		4,0	4,0	3,5	2,9	2,5	1,7	1,3	0,5
EVOSTA 3 40/180 1"		4,0	4,0	3,5	2,9	2,5	1,7	1,3	0,5
EVOSTA 3 40/180 X 1" 1/4		4,0	4,0	3,5	2,9	2,5	1,7	1,3	0,5

MODEL	CENTRE DISTANCE mm	PUMP CONNECTIONS	POWER INPUT 50 Hz	P1 MAX W	In A	EEI *	MINIMUM SUCTION PRESSURE	
							t°	90 °
EVOSTA 3 40/130 1"	130	DN25 THREADED (G 1" ½)	1x230 V ~	20	0,034 - 0,18	0,17	m.c.a.	10
EVOSTA 3 40/130 1/2"	130	DN15 THREADED (G 1")	1x230 V ~	20	0,034 - 0,18	0,17	m.c.a.	10
EVOSTA 3 40/180 1"	180	DN25 THREADED (G 1" ½)	1x230 V ~	20	0,034 - 0,18	0,17	m.c.a.	10
EVOSTA 3 40/180 X 1" 1/4	180	DN30 THREADED (G 2")	1x230 V ~	20	0,034 - 0,18	0,17	m.c.a.	10

*The parameter of reference for the more efficient circulators is EEI ≤ 0,19

MODEL	L	L1	B	B1	B2	H	F	PACKING DIMENSIONS			VOLUME m³	WEIGHT kg
								L	B	H		
EVOSTA 3 40/130 1"	130	107.5	144.1	45	99.1	91	1" ½	192	113,5	155	0,0034	2,05
EVOSTA 3 40/130 1/2"	130	107.5	144.1	45	99.1	91	1	192	113,5	155	0,0034	1,9
EVOSTA 3 40/180 1"	180	107.5	144.1	45	99.1	91	1" ½	192	113,5	155	0,0034	2,22
EVOSTA 3 40/180 X 1" 1/4	180	107.5	144.1	45	99.1	91	2"	192	113,5	155	0,0034	2,38

EVOSTA 3 - ELECTRONIC CIRCULATORS FOR DOMESTIC HEATING AND COOLING SYSTEMS - SINGLE, WITH UNIONS

Pumped liquid temperature range: from -10 °C to +110 °C - **Maximum operating pressure:** 10 bar (1000 kPa)

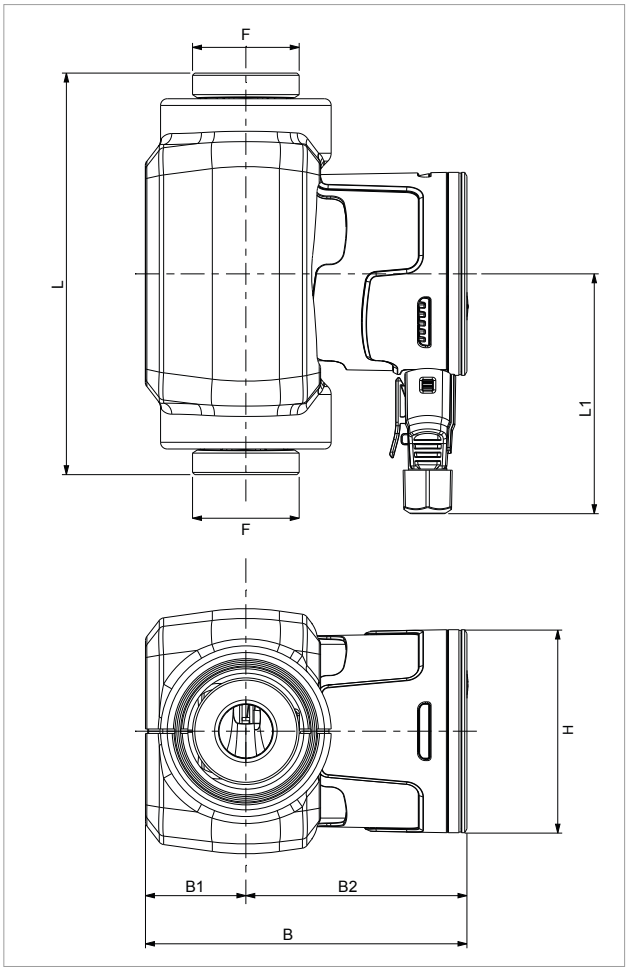

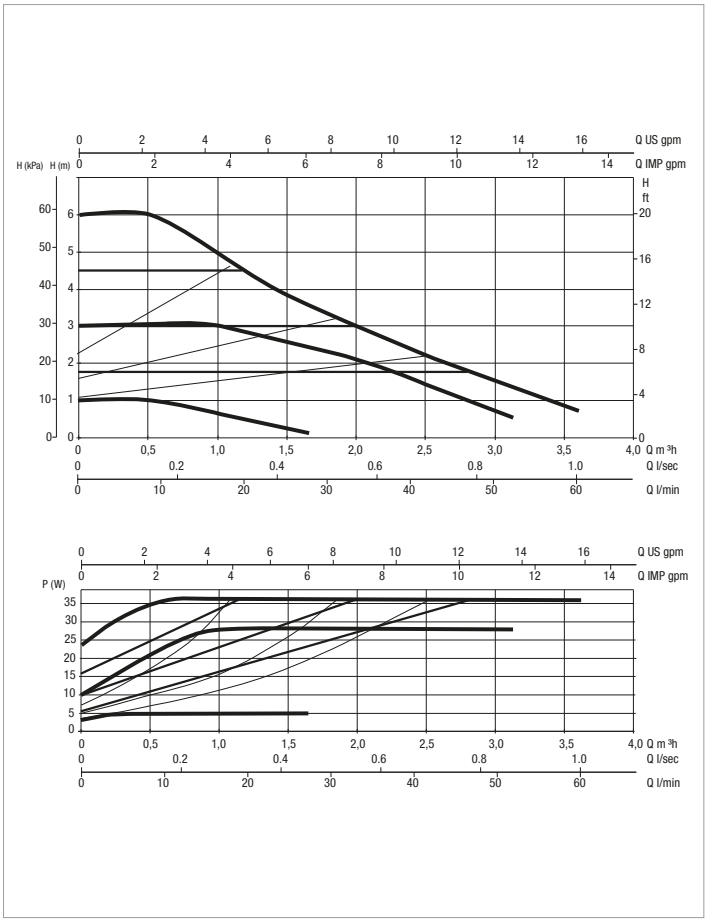

The performance curves are based on kinematic viscosity values = 1 mm²/s and density equal to 1000 kg/m³. Curve tolerance according to ISO 9906.

MODEL	Q=m³h	0	0,6	1,2	1,5	2,1	2,4	3,0	3,6
	Q=l/min	0	9	20	25	35	40	50	60
EVOSTA 3 60/130 1"	H (m)	6,0	6,0	4,4	3,8	2,8	2,3	1,5	0,7
EVOSTA 3 60/130 1/2"		6,0	6,0	4,4	3,8	2,8	2,3	1,5	0,7
EVOSTA 3 60/180 1"		6,0	6,0	4,4	3,8	2,8	2,3	1,5	0,7
EVOSTA 3 60/180X 1" 1/4		6,0	6,0	4,4	3,8	2,8	2,3	1,5	0,7

MODEL	CENTRE DISTANCE mm	PUMP CONNECTIONS	POWER INPUT 50 Hz	P1 MAX W	In A	EEI*	MINIMUM SUCTION PRESSURE	
							t°	90 °
EVOSTA 3 60/130 1"	130	DN25 THREADED (G 1" ½)	1x230 V ~	35	0,042 - 0,33	0,18	m.c.a.	10
EVOSTA 3 60/130 1/2"	130	DN15 THREADED (G 1")	1x230 V ~	35	0,042 - 0,33	0,18	m.c.a.	10
EVOSTA 3 60/180 1"	180	DN25 THREADED (G 1" ½)	1x230 V ~	35	0,042 - 0,33	0,18	m.c.a.	10
EVOSTA 3 60/180X 1" 1/4	180	DN30 THREADED (G 2")	1x230 V ~	35	0,042 - 0,33	0,18	m.c.a.	10

*The parameter of reference for the more efficient circulators is EEI ≤ 0,19

MODEL	L	L1	B	B1	B2	H	F	PACKING DIMENSIONS			VOLUME m³	WEIGHT kg
								L	B	H		
EVOSTA 3 60/130 1"	130	107.5	144.1	45	99.1	91	1" ½	192	113,5	155	0,0034	2,05
EVOSTA 3 60/130 1/2"	130	107.5	144.1	45	99.1	91	1	192	113,5	155	0,0034	1,9
EVOSTA 3 60/180 1"	180	107.5	144.1	45	99.1	91	1" ½	192	113,5	155	0,0034	2,22
EVOSTA 3 60/180X 1" 1/4	180	107.5	144.1	45	99.1	91	2"	192	113,5	155	0,0034	2,38

DAB PUMPS reserves the right to make modifications without notice

EVOSTA 3 - ELECTRONIC CIRCULATORS FOR DOMESTIC HEATING AND COOLING SYSTEMS - SINGLE, WITH UNIONS

Pumped liquid temperature range: from -10 °C to +110 °C - **Maximum operating pressure:** 10 bar (1000 kPa)

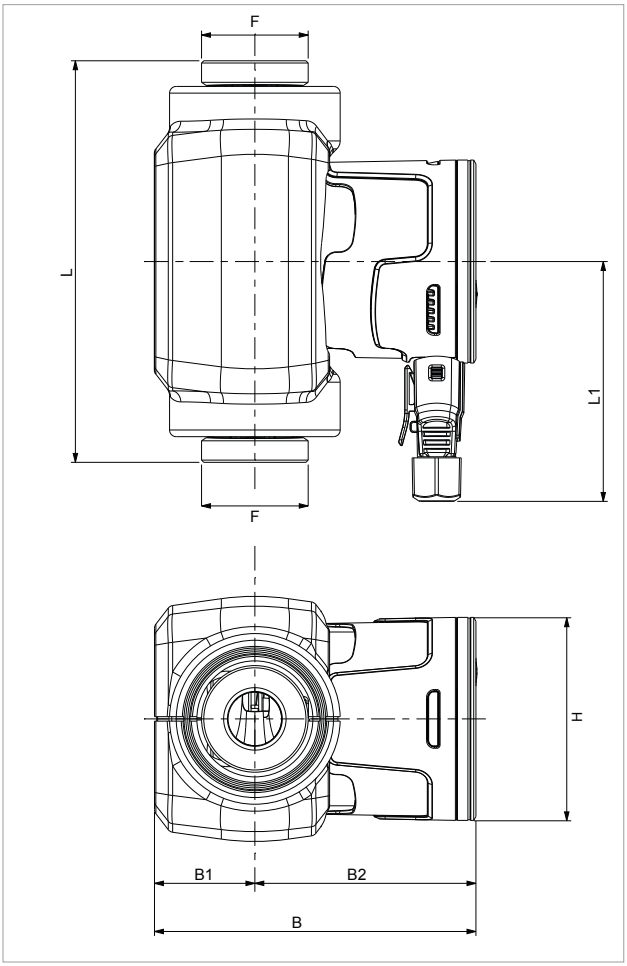

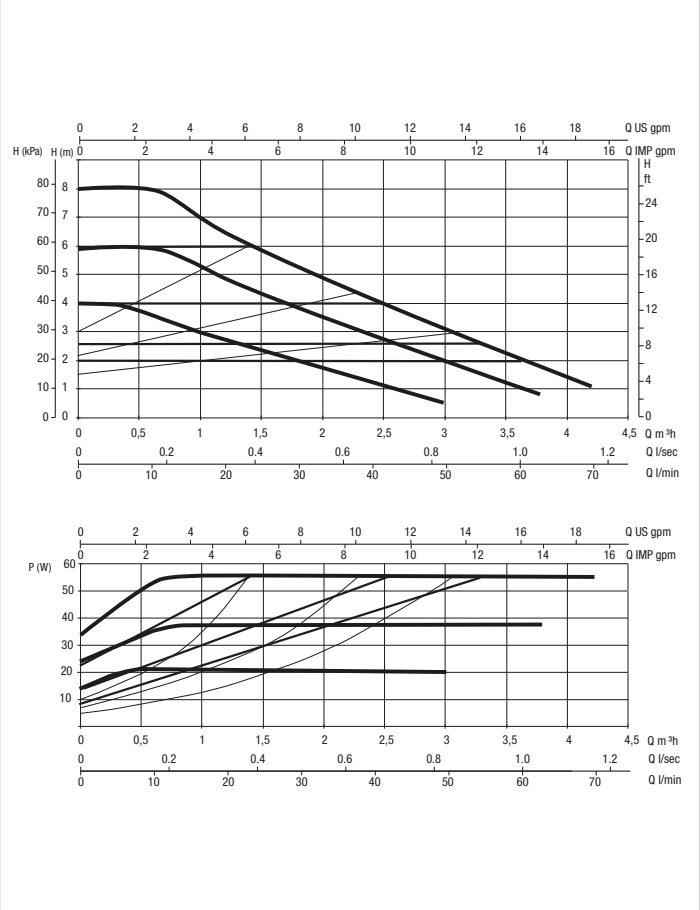

The performance curves are based on kinematic viscosity values = 1 mm²/s and density equal to 1000 kg/m³. Curve tolerance according to ISO 9906.

MODEL	Q=m³h	0	0,6	0,9	1,2	2,7	3,3	3,9	4,2
	Q=l/min	0	10	15	20	45	55	65	70
EVOSTA 3 80/130 1"	H (m)	8,0	8,0	7,2	6,5	3,7	2,6	1,6	1,0
EVOSTA 3 80/130 1/2"		8,0	8,0	7,2	6,5	3,7	2,6	1,6	1,0
EVOSTA 3 80/180 1"		8,0	8,0	7,2	6,5	3,7	2,6	1,6	1,0
EVOSTA 3 80/180X 1" 1/4		8,0	8,0	7,2	6,5	3,7	2,6	1,6	1,0

MODEL	CENTRE DISTANCE mm	PUMP CONNECTIONS	POWER INPUT 50 Hz	P1 MAX W	In A	EEI*	MINIMUM SUCTION PRESSURE	
							t°	90 °
EVOSTA 3 80/130 1"	130	DN25 THREADED (G - 1" ½)	1x230 V ~	55	0,053 -0,47	≤ 0,19	m.c.a.	10
EVOSTA 3 80/130 1/2"	130	DN15 THREADED (G - 1")	1x230 V ~	55	0,053 -0,47	≤ 0,19	m.c.a.	10
EVOSTA 3 80/180 1"	180	DN25 THREADED (G - 1" ½)	1x230 V ~	55	0,053 -0,47	≤ 0,19	m.c.a.	10
EVOSTA 3 80/180X 1" 1/4	180	DN30 THREADED (G - 2")	1x230 V ~	55	0,053 -0,47	≤ 0,19	m.c.a.	10

*The parameter of reference for the more efficient circulators is EEI ≤ 0,19

MODEL	L	L1	B	B1	B2	H	F	PACKING DIMENSIONS			VOLUME m³	WEIGHT kg
								L	B	H		
EVOSTA 3 80/130 1"	130	107.5	144.1	45	99.1	91	1" ½	192	113,5	155	0,0034	2,05
EVOSTA 3 80/130 1/2"	130	107.5	144.1	45	99.1	91	1	192	113,5	155	0,0034	1,9
EVOSTA 3 80/180 1"	180	107.5	144.1	45	99.1	91	1" ½	192	113,5	155	0,0034	2,22
EVOSTA 3 80/180X 1" 1/4	180	107.5	144.1	45	99.1	91	2"	192	113,5	155	0,0034	2,38

DAB PUMPS reserves the right to make modifications without notice

EVOSTA 2 SAN

WET ROTOR ELECTRONIC CIRCULATORS

TECHNICAL DATA

Operating range: 0-0,6 m^3/h with head up to 1,1 metri
Pumped liquid temperature range: : from +2 °C to +75°C
Working pressure: 10 bar (1000 kPa)
Protection class: IP42
Insulation class: II
Installation: with horizontal motor axis.
Standard power input: single-phase 1x115-230 V~ 50/60 Hz
Pumped liquid: Clean, free of solids and mineral oils, non-viscous, chemically neutral, with properties similar to water (glycol max 30%).

APPLICATIONS

Low energy consumption electronic pump for domestic hot water circulation.

CONSTRUCTION FEATURES

Self-protected synchronous motor with spherical rotor requiring just one seal ring between the motor and the pump body. Easy to clean or replace.
Brass pump body with R ½" (G ½") internal thread in the R version, or with check valve and isolation valve supplied as standard in version V for connector with ½" external thread (G 1")

Model Number:
(example)

	EVOSTA 2	11/139	V	R
Threaded ports electronic circulator				
Maximum head range (dm)				
External thread: ½" G 1"				
Internal thread: R ½" (G ½")				

DAB PUMPS reserves the right to make modifications without notice

DAB WATER•TECHNOLOGY

EVOSTA 2 SAN - ELECTRONIC CIRCULATORS FOR DOMESTIC HEATING AND COOLING SYSTEMS - SINGLE, WITH UNIONS

Pumped liquid temperature range: from +2 °C to +75°C - **Maximum operating pressure:** 10 bar (1000 kPa)

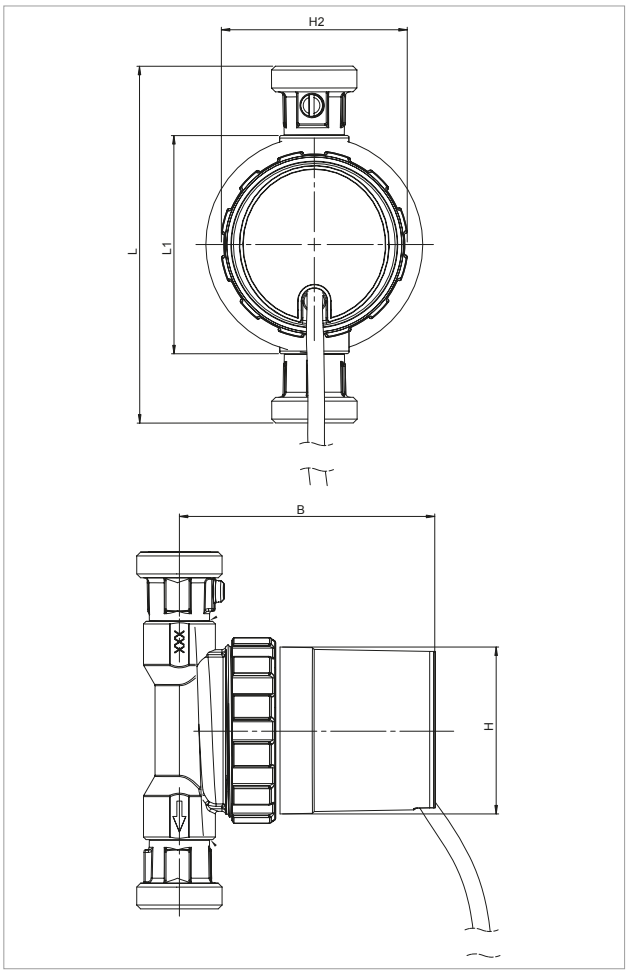

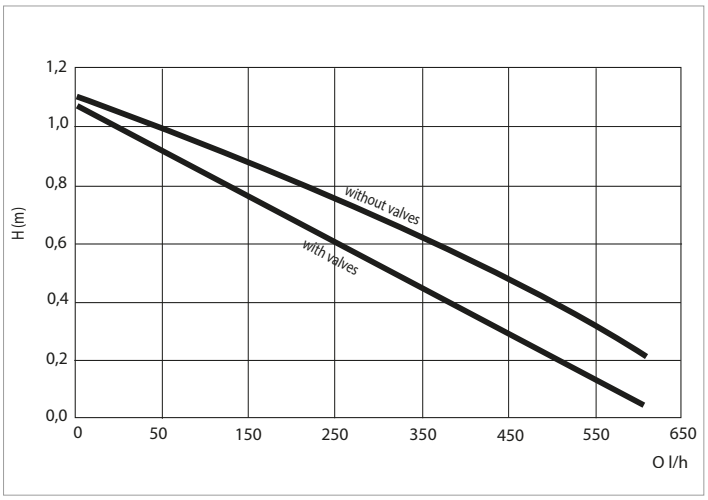

The performance curves are based on kinematic viscosity values = 1 mm^2/s and density equal to 1000 kg/m^3. Curve tolerance according to ISO 9906.

MODEL	Q=m³h	0	0,1	0,2	0,3	0,4	0,5	0,6
	Q=l/h	0	100	200	300	400	500	600
EVOSTA 2 11/139 V	H (m)	1,1	0,93	0,76	0,59	0,4	0,23	0,7
EVOSTA 2 11/ 85 R		1,1	1	0,87	0,73	0,58	0,4	0,23

MODEL	CENTRE DISTANCE mm	PUMP CONNECTIONS	POWER INPUT 50 Hz	P1 MAX W	In A	MINIMUM SUCTION PRESSURE	
						t°	90 °
EVOSTA 2 11/139 V	139	external thread G 1"	1x115-230 V~ 50/60 Hz	7	0,07A	m.c.a.	10
EVOSTA 2 11/ 85 R	85	internal thread G 1/2"	1x115-230 V~ 50/60 Hz	7	0,07A	m.c.a.	10

MODEL	L	L1	B	H	H2	CABLE LENGTH	PACKING DIMENSIONS			VOLUME m³	WEIGHT kg
							L	B	H		
EVOSTA 2 11/139 V	139	-	100	65	72	1,5m	175	125	105	0,0023	1,065
EVOSTA 2 11/ 85 R	-	85	100	65	72	1,5m	175	125	105	0,0023	1,260

DAB PUMPS reserves the right to make modifications without notice

EVOSTA 2 SOL

WET ROTOR ELECTRONIC CIRCULATORS

TECHNICAL DATA

Operating range: 0-4 m^3/h with head up to 14,5 metres.
Pumped liquid temperature range: from -10 °C to +110 °C.
(130 °C to 60 °C ambient)
Working pressure: 10 bar (1000 kPa)
Protection class: IPX4
Insulation class: F
Installation: with horizontal motor axis
Standard power input: single-phase 1x115-230 V ~ 50/60 Hz
Power input connection: molex plug with 1.5m cable
Pwm signal connector: plug with 1.5m cable (OEM versions only)
Pumped liquid: Clean, free of solids and mineral oils, non-viscous, chemically neutral, with properties similar to water (glycol max 50%).

APPLICATIONS

Low energy consumption electronic pump for hot water circulation in all types of solar heating systems.

ADVANTAGES

EVOSTA 2 SOL is the new range of DAB circulators that combines the strength of the mechanical circulator with the benefits of the electronic circulator.
Thanks to the permanent magnet synchronous motor, the frequency converter and the energy efficiency index of EEI ≤ 0.20, as well as the IPX4 protection class and the integrated breather plug, the EVOSTA 2 SOL family ranks as one of the best products in the category in terms of performance and reliability. The range of EVOSTA 2 SOL circulators is the perfect substitute for old three-speed circulators due to its compact size and all-round performance.
The product is also extremely user-friendly, with a single key for sequential setting and direct access to the motor shaft for unlocking this when necessary.

CONSTRUCTION FEATURES

Cast iron pump body with cataphoresis paint coating and wet rotor motor. Steel motor casing, technopolymer impeller. Ceramic motor shaft on ceramic bushings lubricated by the pumped liquid. Stainless steel rotor liner, stator liner and closing flange. Graphite thrust ring. EPDM seal ring and brass air breather plug.
Thanks to the internal protection of the motor, the pump does not require overload protection.

CONTROL PANEL

The functions of the EVOSTA 2 SOL circulators can be modified at the control panel on the cover of the electronic control device. The pump has nine settings that can be selected using the MODE button

Six illuminated segments on the display indicate the settings of the pump. The EVOSTA SOL PWM version can be controlled from an external control unit using the PWM (Pulse Width Modulation) digital signal. The setpoint of the adjustment curve can be of the following types:
- Proportional pressure
- Constant speed.

This is set through the PWM signal duty cycle, applied according to the VDMA Einheitsblatt 24244 standard “Wet runner circulating pumps – Specification of PWM control signals”.
Moreover, a PWM signal on the output of the board indicates the operating mode of the circulator, as specified below.

DAB PUMPS reserves the right to make modifications without notice

MATERIALS

N°	PARTS	MATERIALS
1	ROTOR CAN FLANGE	AISI 316
2	IMPELLER	ULTRASON
3	SHAFT	ALUMINA
4	ROTOR	NEODYMIUM
5	BEARING HOUSING	BRASS
6	BEARING	ALUMINA
7	AXIAL BEARING	CARBON
8	AXIAL HOUSING	EPDM
9	PLUG	BRASS
10	O-ring	EPDM
11	STATOR HOUSING	AISI 304
12	ENCLOUSER SHELL	POLYCARBONATE
13	ENCLOUSER	POLYCARBONATE
14	ROTOR SLEEV	AISI 304
15	SEAL	EPDM
16	PUMP HOUSING	CAST IRON
17	NECK RING	AISI 304

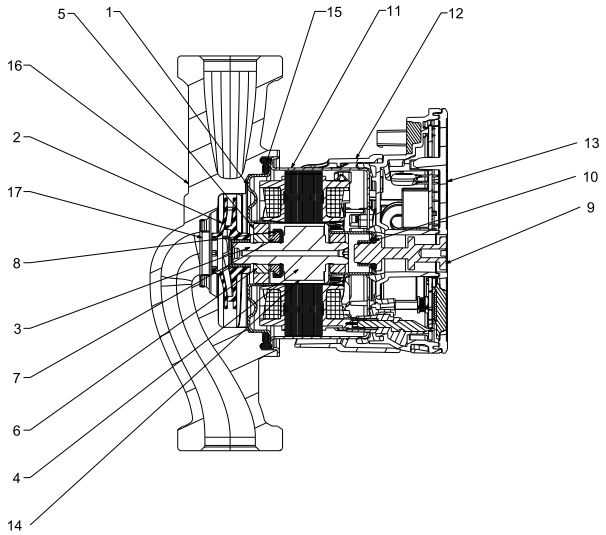

REGULATION MODES

PROPORTIONAL PRESSURE REGULATION MODE

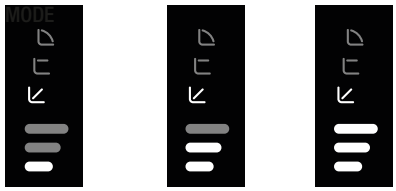

PP1 PP2 PP3

CONSTANT PRESSURE REGULATION

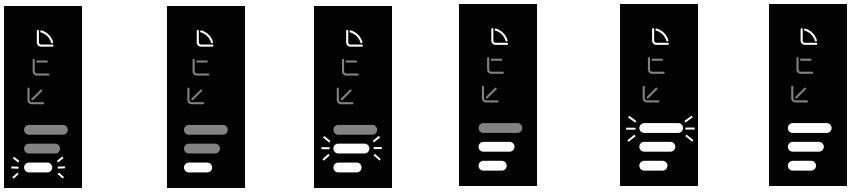

I II III IV V VI

- Model Number (example)

EVOSTA 2 SOL 20/75 130 X

Threaded connections electronic circulator

Maximum head range (dm)

Centre distance (mm)

Standard (no ref.) = 1" ½ threaded connections
½" = 1" threaded connections
X = 2" threaded connections

EVOSTA 2 SOL - ELECTRONIC CIRCULATORS FOR DOMESTIC HEATING AND COOLING SYSTEMS - SINGLE, WITH UNIONS

Pumped liquid temperature range: da -10°C a +110°C - **Maximum operating pressure:** 10 bar (1000 kPa)

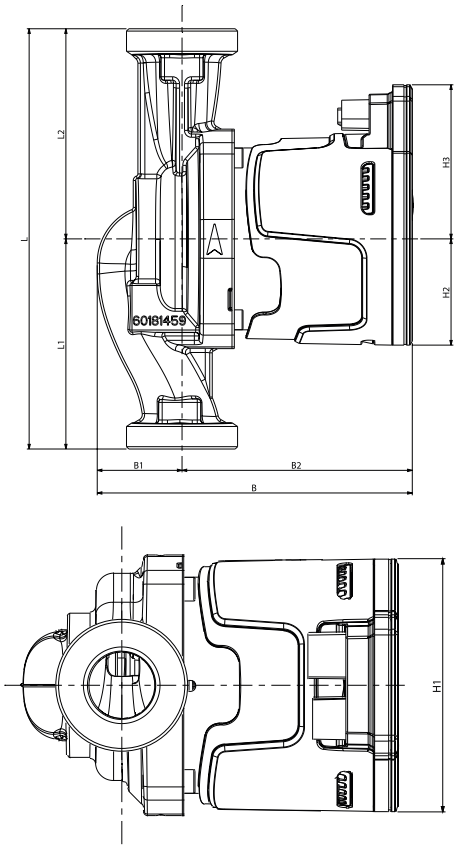

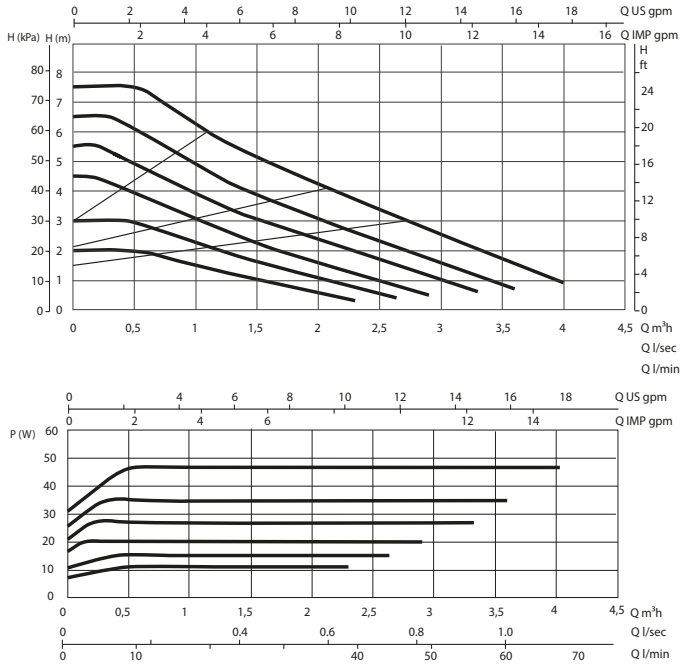

The performance curves are based on kinematic viscosity values = 1 mm²/s and density equal to 1000 kg/m³. Curve tolerance according to ISO 9906.

MODEL	CENTRE DISTANCE mm	PUMP CONNECTIONS	SIGNAL PWM	POWER INPUT 50 Hz	P1 MAX W	In A	EEI *	MINIMUM SUCTION PRESSURE	
								t°	90°
EVOSTA 2 75/130 SOL	130	DN25 FILETTATO (G 1" ½)	NO	1x230 V ~	47	0,07-0,4	≤ 0,20	m.c.a	10
EVOSTA 2 75/180 SOL	180	DN25 FILETTATO (G 1" ½)	NO	1x230 V ~	47	0,07-0,4	≤ 0,20	m.c.a	10
EVOSTA 2 75/130 SOL 1/2	130	DN15 FILETTATO (G 1")	NO	1x230 V ~	47	0,07-0,4	≤ 0,20	m.c.a	10
EVOSTA 2 75/130 SOL PWM	130	DN25 FILETTATO (G 1" ½)	YES	1x230 V ~	47	0,07-0,4	≤ 0,20	m.c.a	10
EVOSTA 2 75/130 SOL PWM 1/2	130	DN15 FILETTATO (G 1")	YES	1x230 V ~	47	0,07-0,4	≤ 0,20	m.c.a	10
EVOSTA 2 75/180 SOL PWM	180	DN25 FILETTATO (G 1" ½)	YES	1x230 V ~	47	0,07-0,4	≤ 0,20	m.c.a	10

*The parameter of reference for the more efficient circulators is EEI ≤ 0,20

MODEL	L	L1	L2	B	B1	B2	H	H1	H2	H3	F	PACKING DIMENSIONS			VOLUME m³	WEIGHT kg
												L	B	H		
EVOSTA 2 75/130 SOL	130	65	65	135	36	99	94	91	45,5	66	1"1/2	192	100	150	0,028	2,07
EVOSTA 2 75/180 SOL	180	90	90	135	36	99	94	91	45,5	66	1"1/2	192	100	150	0,028	2,24
EVOSTA 2 75/130 SOL 1/2	130	65	65	135	36	99	94	91	45,5	66	1"	192	100	150	0,028	1,91
EVOSTA 2 75/130 SOL PWM	130	65	65	135	36	99	94	91	45,5	66	1"1/2	192	100	150	0,028	2,12
EVOSTA 2 75/130 SOL PWM 1/2	130	65	65	135	36	99	94	91	45,5	66	1"	192	100	150	0,028	1,96
EVOSTA 2 75/180 SOL PWM	180	90	90	135	36	99	94	91	45,5	66	1"1/2	192	100	150	0,028	2,29

DAB PUMPS reserves the right to make modifications without notice

EVOSTA 2 SOL - ELECTRONIC CIRCULATORS FOR DOMESTIC HEATING AND COOLING SYSTEMS - SINGLE, WITH UNIONS

Pumped liquid temperature range: da -10°C a +110°C - **Maximum operating pressure:** 10 bar (1000 kPa)

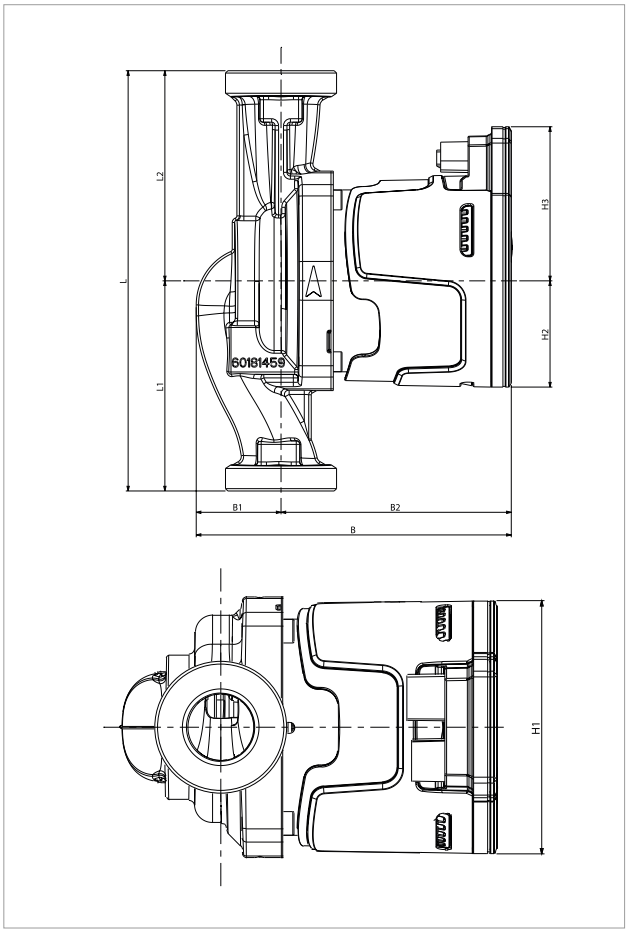

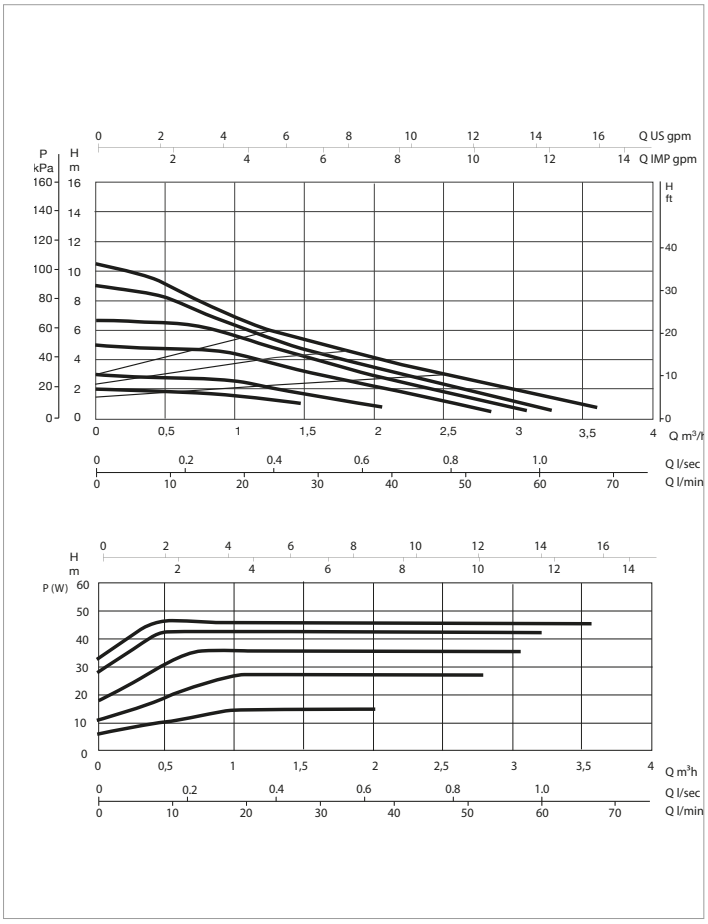

The performance curves are based on kinematic viscosity values = 1 mm²/s and density equal to 1000 kg/m³. Curve tolerance according to ISO 9906.

MODEL	CENTRE DISTANCE mm	PUMP CONNECTIONS	SIGNAL PWM	POWER INPUT 50 Hz	P1 MAX W	In A	EEI *	MINIMUM SUCTION PRESSURE	
								t°	90°
EVOSTA 2 105/130 SOL	130	DN25 FILETTATO (G 1" ½)	NO	1x230 V ~	48	0,055-0,4	≤ 0,20	m.c.a	10
EVOSTA 2 105/180 SOL	180	DN25 FILETTATO (G 1" ½)	NO	1x230 V ~	48	0,055-0,4	≤ 0,20	m.c.a	10
EVOSTA 2 105/130 SOL 1/2	130	DN15 FILETTATO (G 1")	NO	1x230 V ~	48	0,055-0,4	≤ 0,20	m.c.a	10
EVOSTA 2 105/130 SOL PWM	130	DN25 FILETTATO (G 1" ½)	YES	1x230 V ~	48	0,055-0,4	≤ ,20	m.c.a	10
EVOSTA 2 105/130 SOL PWM 1/2	130	DN15 FILETTATO (G 1")	YES	1x230 V ~	48	0,055-0,4	≤ 0,20	m.c.a	10
EVOSTA 2 105/180 SOL PWM	180	DN25 FILETTATO (G 1" ½)	YES	1x230 V ~	48	0,055-0,4	≤ 0,20	m.c.a	10

*The parameter of reference for the more efficient circulators is EEI ≤ 0,20

MODEL	L	L1	L2	B	B1	B2	H	H1	H2	H3	F	PACKING DIMENSIONS			VOLUME m³	WEIGHT kg
												L	B	H		
EVOSTA 2 105/130 SOL	130	65	65	135	36	99	94	91	45,5	66	1"1/2	192	100	150	0,028	2,07
EVOSTA 2 105/180 SOL	180	90	90	135	36	99	94	91	45,5	66	1"1/2	192	100	150	0,028	2,24
EVOSTA 2 105/130 SOL 1/2	130	65	65	135	36	99	94	91	45,5	66	1"	192	100	150	0,028	1,91
EVOSTA 2 105/130 SOL PWM	130	65	65	135	36	99	94	91	45,5	66	1"1/2	192	100	150	0,028	2,12
EVOSTA 2 105/130 SOL PWM 1/2	130	65	65	135	36	99	94	91	45,5	66	1"	192	100	150	0,028	1,96
EVOSTA 2 105/180 SOL PWM	180	90	90	135	36	99	94	91	45,5	66	1"1/2	192	100	150	0,028	2,29

DAB PUMPS reserves the right to make modifications without notice

EVOSTA 2 SOL - ELECTRONIC CIRCULATORS FOR DOMESTIC HEATING AND COOLING SYSTEMS - SINGLE, WITH UNIONS

Pumped liquid temperature range: da -10°C a +110°C - **Maximum operating pressure:** 10 bar (1000 kPa)

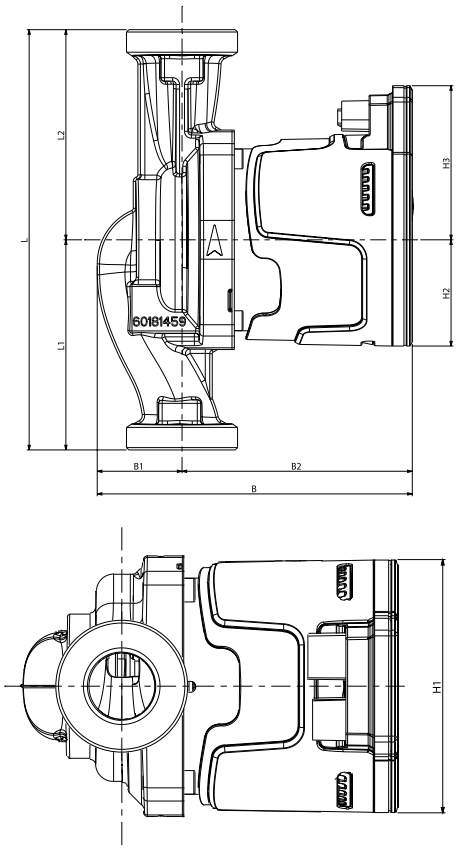

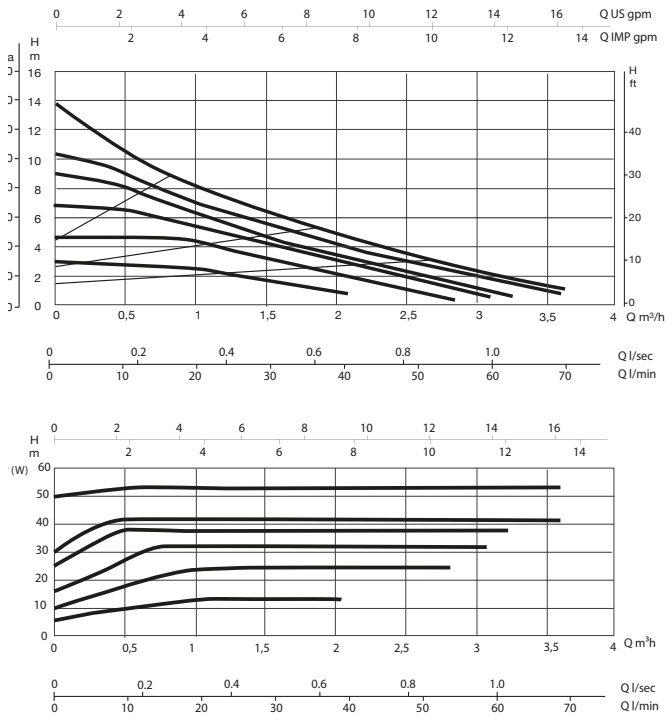

The performance curves are based on kinematic viscosity values = 1 mm²/s and density equal to 1000 kg/m³. Curve tolerance according to ISO 9906.

MODEL	CENTRE DISTANCE mm	PUMP CONNECTIONS	SIGNAL PWM	POWER INPUT 50 Hz	P1 MAX W	In A	EEI*	MINIMUM SUCTION PRESSURE	
								t°	90°
EVOSTA 2 145/130 SOL	130	DN25 FILETTATO (G 1" ½)	NO	1x230 V ~	59	0,07-0,5	≤ 0,20	m.c.a	10
EVOSTA 2 145/180 SOL	180	DN25 FILETTATO (G 1" ½)	NO	1x230 V ~	59	0,07-0,5	≤ 0,20	m.c.a	10
EVOSTA 2 145/130 SOL 1/2	130	DN15 FILETTATO (G 1")	NO	1x230 V ~	59	0,07-0,5	≤ 0,20	m.c.a	10
EVOSTA 2 145/130 SOL PWM	130	DN25 FILETTATO (G 1" ½)	SI	1x230 V ~	59	0,07-0,5	≤ 0,20	m.c.a	10
EVOSTA 2 145/130 SOL PWM 1/2	130	DN15 FILETTATO (G 1")	SI	1x230 V ~	59	0,07-0,5	≤ 0,20	m.c.a	10
EVOSTA 2 145/180 SOL PWM	180	DN25 FILETTATO (G 1" ½)	SI	1x230 V ~	59	0,07-0,5	≤ 0,20	m.c.a	10

*The parameter of reference for the more efficient circulators is EEI ≤ 0,20

MODEL	L	L1	L2	B	B1	B2	H	H1	H2	H3	F	PACKING DIMENSIONS			VOLUME m^3	WEIGHT kg
												L	B	H		
EVOSTA 2 145/130 SOL	130	65	65	135	36	99	94	91	45,5	66	1"1/2	192	100	150	0,028	2,07
EVOSTA 2 145/180 SOL	180	90	90	135	36	99	94	91	45,5	66	1"1/2	192	100	150	0,028	2,24
EVOSTA 2 145/130 SOL 1/2	130	65	65	135	36	99	94	91	45,5	66	1"	192	100	150	0,028	1,91
EVOSTA 2 145/130 SOL PWM	130	65	65	135	36	99	94	91	45,5	66	1"1/2	192	100	150	0,028	2,12
EVOSTA 2 145/130 SOL PWM 1/2	130	65	65	135	36	99	94	91	45,5	66	1"	192	100	150	0,028	1,96
EVOSTA 2 145/180 SOL PWM	180	90	90	135	36	99	94	91	45,5	66	1"1/2	192	100	150	0,028	2,29

DAB PUMPS reserves the right to make modifications without notice

EVOSTA 2 SOL - ELECTRONIC CIRCULATORS FOR DOMESTIC HEATING AND COOLING SYSTEMS - SINGLE, WITH UNIONS

Pumped liquid temperature range: da -10°C a +110°C - **Maximum operating pressure:** 10 bar (1000 kPa)

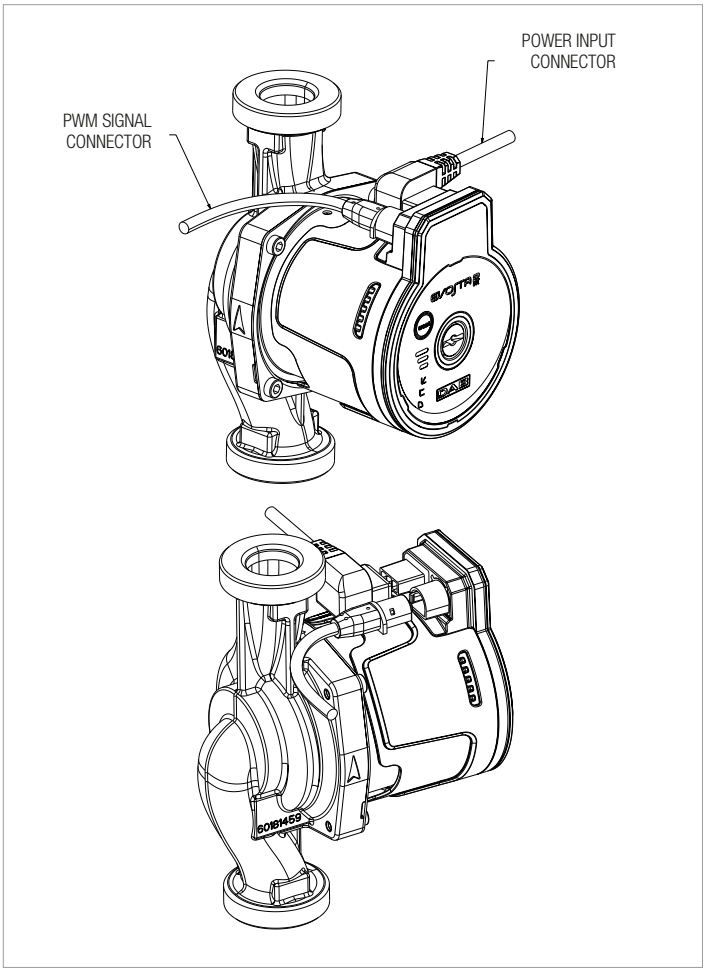

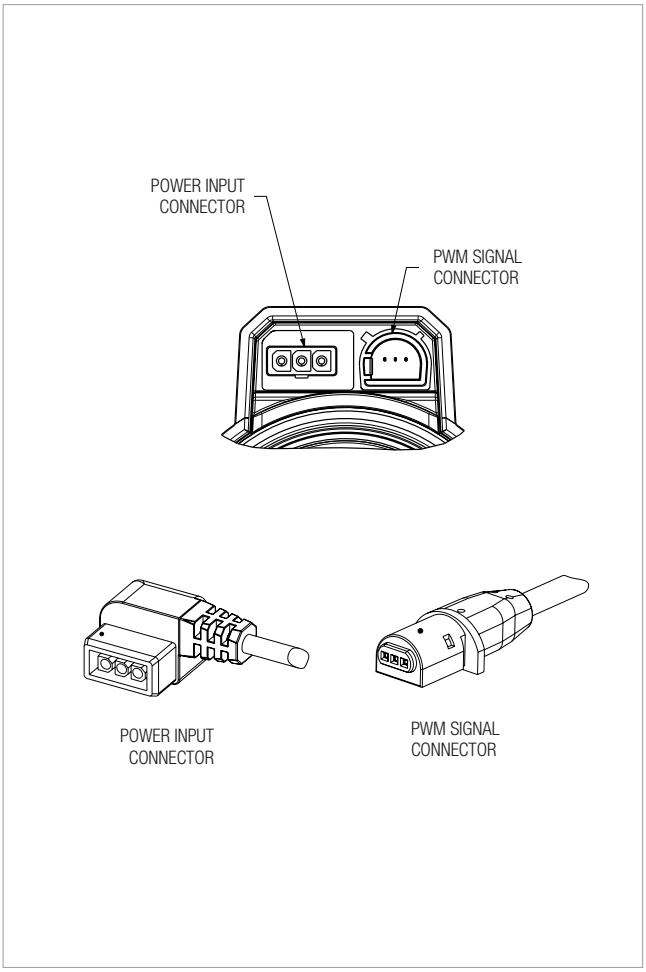

MODEL	CABLE LENGTH
POWER INPUT CONNECTOR	1,5 m
PWM SIGNAL CONNECTOR	1,5 m

INPUT PWM SIGNAL

Inactive level : 0V
Active level da 5V-15V
Active level minimum current : 5 mA
Frequency: 100Hz - 5 kHz
Protection class: Class 2
ESD class Compliance with IEC 61000-4-2 (ESD)

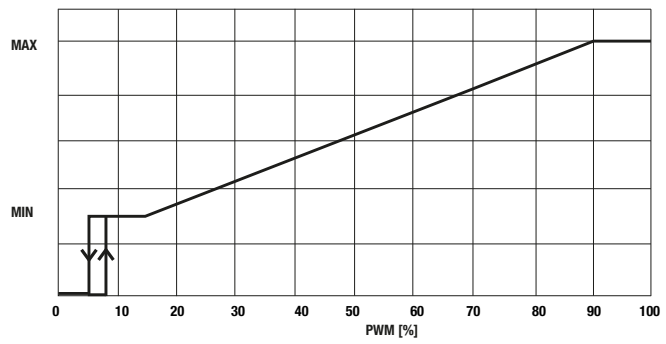

WORKING AREA	DUTY CICLE PWM
STANDBY MODE	< 5%
HYSTERESIS AREA	≥ 5 % / <9 %
MINIMUM SET POINT	≥ 9 % / <16 %
VARIABLE SETPOINT	≥ 16 % / ≤ 90 %
MAXIMUM SETPOINT	≥ 90 % / ≤100 %

OUTPUT PWM SIGNAL

Type: Open collector V
Frequency: 5V-15V
Maximum current on output transistor: 50 mA
Maximum power on output resistor: 125 mW
Maximum power on output zener 36 V: 300 mW
Frequency: 75 Hz +/- 2%
Protection class: Class 2
ESD class: Compliance with IEC 61000-4-2 (ESD)

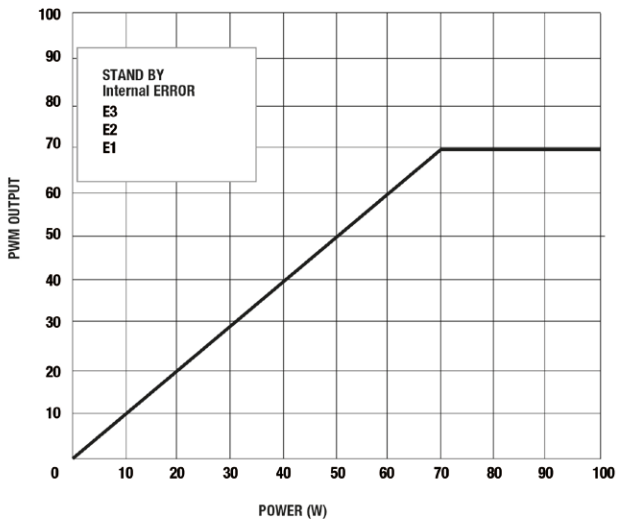

WORKING AREA	DUTY CICLE PWM
RUNNING PUMP	1%-70%
ERROR 1 DRY RUN	75%
ERROR 2 LOCKED ROTOR	80%
ERROR 3 SHORT CIRCUIT	85%
INTERNAL ERROR	90%
STANDBY (STOP) BY PWM INPUT SIGNAL	95%

Via Marco Polo, 14 - 35035 Mestrino (PD) Italy - Tel. +39.049.5125000 - Fax +39.049.5125950
www.dabpumps.com

DNA® PUMPS SELECTOR

On-line product selection

DAB PUMPS LTD.
6 Gilberd Court
Newcomen Way
Severalls Business Park
Colchester
Essex
CO4 9WN - UK
salesuk@dwtgroup.com
Tel. +44 0333 777 5010

DAB PUMPS BV
'tHofveld 6 C1
1702 Groot Bijgaarden - Belgium
info.belgium@dwtgroup.com
Tel. +32 2 4668353

DAB PUMPS B.V.
Albert Einsteinweg, 4
5151 DL Drunen - Nederland
info.netherlands@dwtgroup.com
Tel. +31 416 387280
Fax +31 416 387299

DAB PUMPEN DEUTSCHLAND GmbH
Tackweg 11
D - 47918 Tönisvorst - Germany
info.germany@dwtgroup.com
Tel. +49 2151 82136-0
Fax +49 2151 82136-36

DAB PUMPS IBERICA S.L.
Calle Verano 18-20-22
28850 - Torrejón de Ardoz - Madrid
Spain
Info.spain@dwtgroup.com
Tel. +34 91 6569545
Fax: + 34 91 6569676

DAB PUMPS HUNGARY KFT.
H-8800
Nagykanizsa, Buda Ernő u.5
Hungary
Tel. +36 93501700

DAB PUMPS POLAND Sp. z o.o.
Ul. Janka Muzykanta 60
02-188 Warszawa - Poland
polska@dabpumps.com.pl

OOO DAB PUMPS
Novgorodskaya str. 1, block G
office 308, 127247, Moscow - Russia
info.russia@dwtgroup.com
Tel. +7 495 122 0035
Fax +7 495 122 0036

DAB PUMPS INC.
3226 Benchmark Drive
Ladson, SC 29456 - USA
info.usa@dwtgroup.com
Tel. 1- 843-797-5002
Fax 1-843-797-3366

DAB PUMPS SOUTH AFRICA
Twenty One industrial Estate,
16 Purlin Street, Unit B, Warehouse 4
Olifantsfontein -1666 - South Africa
info.sa@dwtgroup.com
Tel. +27 12 361 3997

DAB PUMPS (QINGDAO) CO. LTD.
No.40 Kaituo Road, Qingdao Economic & Technological
Development Zone
Qingdao City, Shandong Province - China
PC: 266500
sales.cn@dwtgroup.com
Tel. +86 400 186 8280
Fax +86 53286812210

DAB PUMPS DE MÉXICO, S.A. DE C.V.
Av Amsterdam 101 Local 4
Col. Hipódromo Condesa,
Del. Cuauhtémoc CP 06170
Ciudad de México
Tel. +52 55 6719 0493

DAB PUMPS OCEANIA PTY LTD
426 South Gippsland Hwy,
Dandenong South VIC 3175 – Australia
info.oceania@dwtgroup.com
Tel. +61 1300 378 677

60191759 - 03/2019